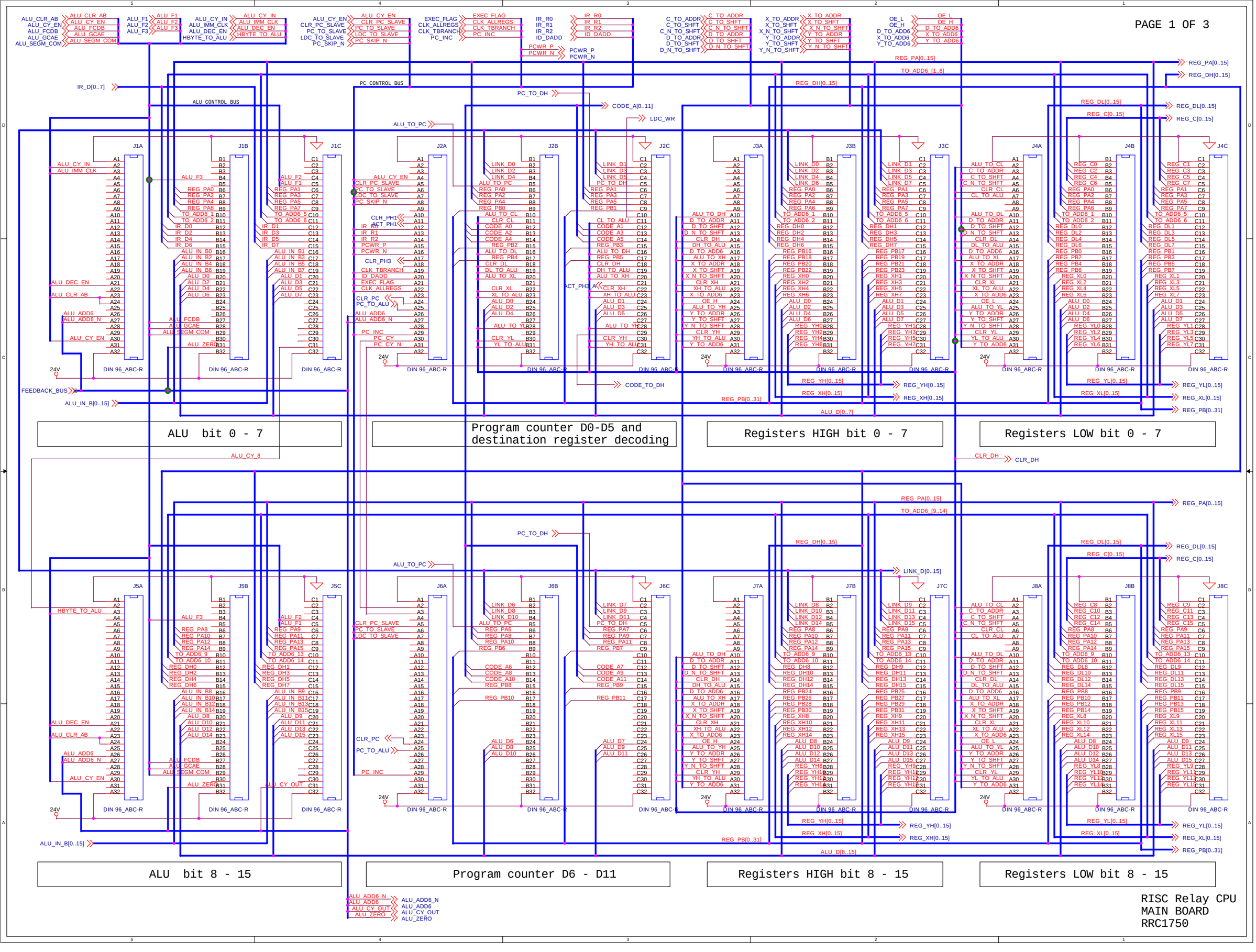
PAGE 1 OF 3
ALU bit 0 - 7
Program counter D0-D5 and destination register decoding
Registers HIGH bit 0 - 7
Registers LOW bit 0 - 7
ALU bit 8 - 15
Program counter D6 - D11
Registers HIGH bit 8 - 15
Registers LOW bit 8 - 15
RISC Relay CPU
MAIN BOARD
RRC1750

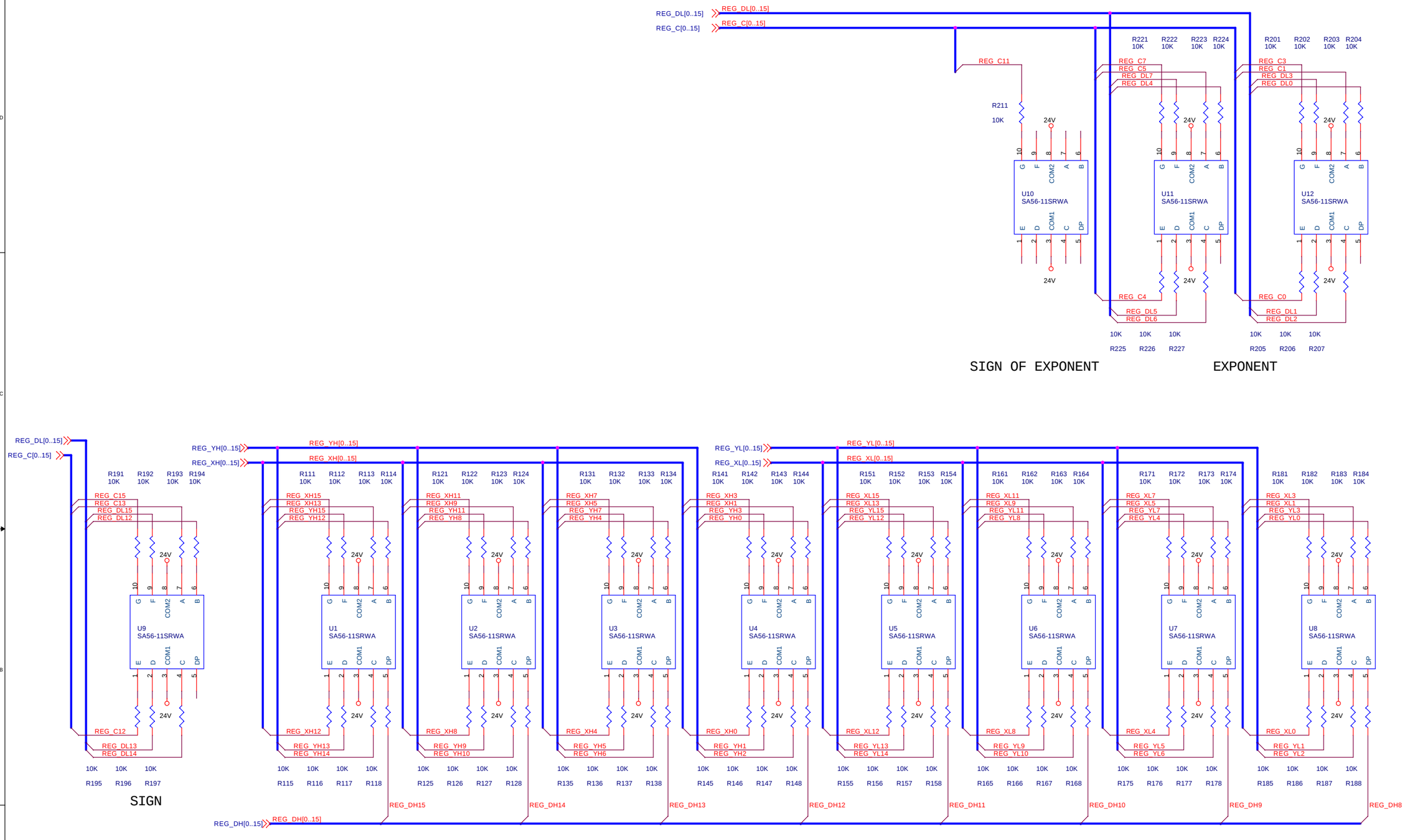

On this page, all resistors 22K instead of 10K

RISC Relay CPU
MAIN BOARD
RRC1750

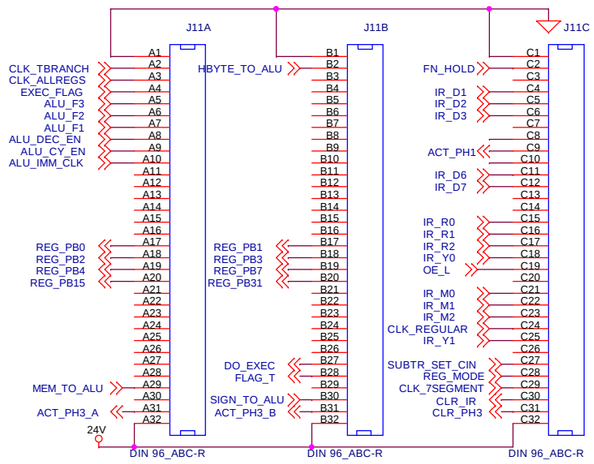

Instruction decoder

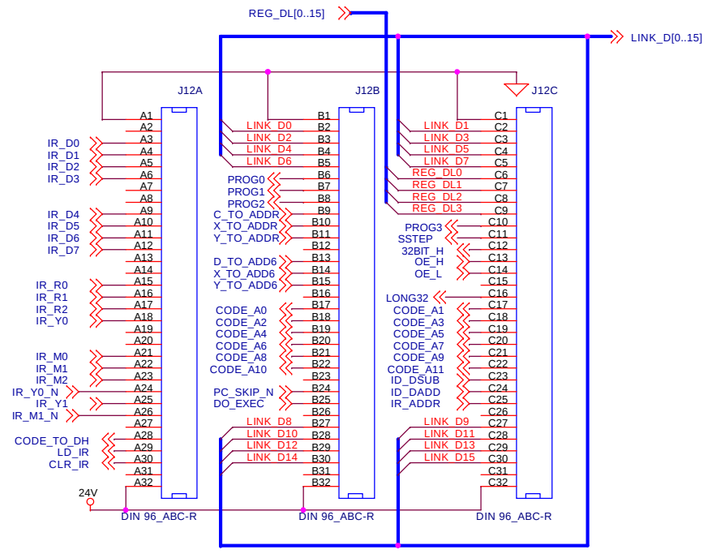

Program memory and instruction register

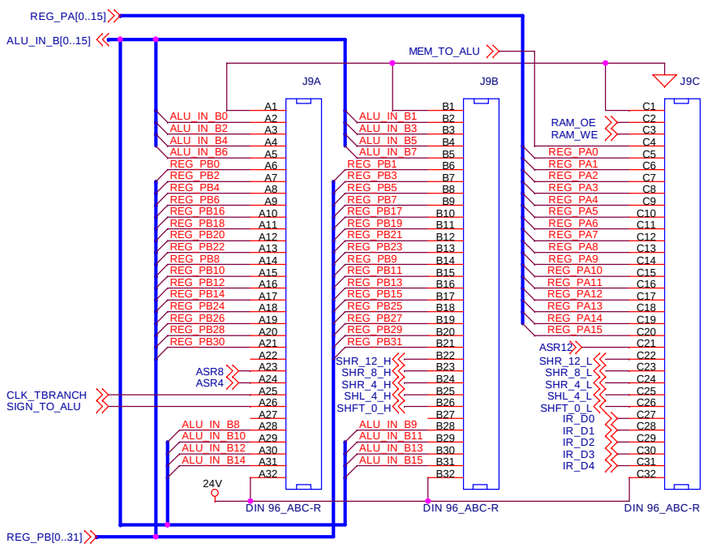

Shifter and data memory

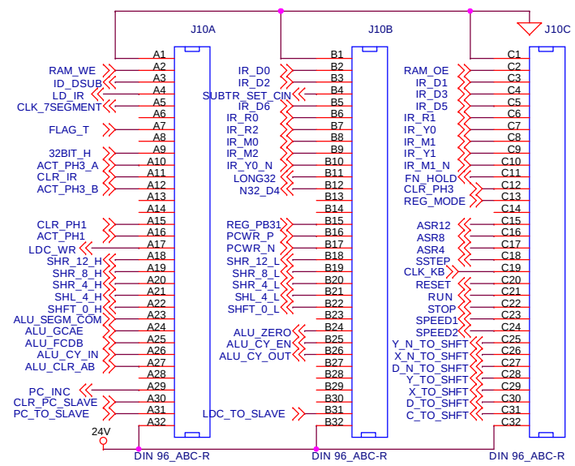

Clock and Control

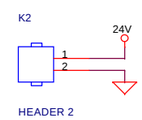

Power connector

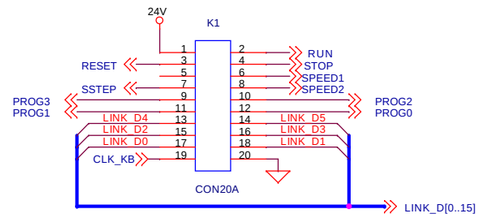

Keyboard connector

RISC Relay CPU
MAIN BOARD
RRC1750